MIB 6 | WALL LIGHT | BLACK

61681003

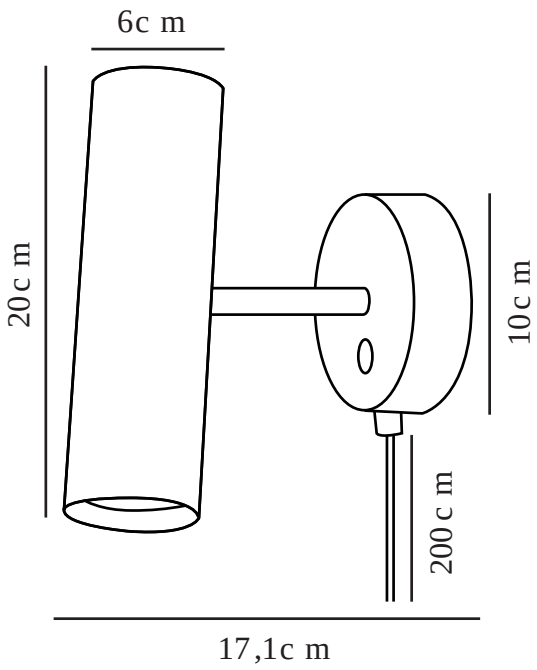

Voltage (V): 220-240 Volt
IP degree: IP20
Maximum bulb wattage (W): 20
Class (Class 1, Class 2, Class 3): Class 2 (Double isolated)
Socket type: GU10
Dimmerable: False
Switch placement: On the wall base
Parallel connection: False

Primary material: Metal
Secondary material: Metal
Colour of the cable: Black
Length of the cable (cm): 180
Surface material of the cable: Plastic
Is the cable replaceable: True

Colour: Black

Height (cm) : 20
Width (cm): 10
Shade Diameter (cm): 6
Shade Height (cm): 20
Lenght (cm): 17
Projection (cm): 17
Tilt Angle (°): 90
Turning Angle (°): 320

EAN: 5704924000409
TUN: 2075961
Item Number: 61681003

Pcs Per Master Carton: 3
Sales Box Height (cm): 26
Sales Box Width(cm): 13.5
Sales Box Depth (cm): 13.5
Sales Box Volume m³ : 0.0047
Product net weight (kg): 0.78

• A contemporary yet timeless design • Slim and elegant
• The tiltable head allows you to adjust the direction of light • On/off touch button on wall base

The minimalistic MIB series by Danish designer Bønnelycke MDD is the epitome of elegant design and Nordic elegance. The slender and adjustable lamp head emits a precise and directional light.