MIB 6 | TABLE LAMP | BLACK

71655003

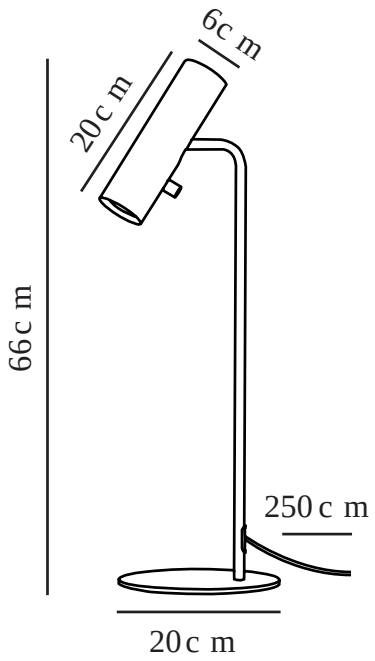

Voltage (V): 220-240 Volt
IP degree: IP20
Maximum bulb wattage (W): 8
Class (Class 1, Class 2, Class 3): Class 2 (Double isolated)
Socket type: GU10
Dimmerable: Yes with compatible bulb
Switch placement: On the fixture
Parallel connection: False

Primary material: Metal
Secondary material: Plastic
Colour of the cable: Black
Length of the cable (cm): 180
Surface material of the cable: Plastic
Is the cable replaceable: False

Colour: Black

Height (cm) : 65
Tube Diameter (cm): 1.27
Shade Diameter (cm): 6
Shade Height (cm): 20
Outdoor base dimension (cm): 20
Lenght (cm): 20
Mount directly into insulation: False
Tilt Angle (°): 90
Turning Angle (°): 320

EAN: 5701581364189
TUN: 1896582

Item Number: 71655003
Pcs Per Master Carton: 3
Sales Box Height (cm): 61.5
Sales Box Width(cm): 23
Sales Box Depth (cm): 8
Sales Box Volume m³ : 0.0113
Product net weight (kg): 1.81

• A contemporary yet timeless design • Slim and elegant
• The tiltable head allows you to adjust the direction of light • On/off switch on lamp head

The minimalistic MIB series by Danish designer Bønnelycke MDD is the epitome of elegant design and Nordic elegance. The slender and adjustable lamp head emits a precise and directional light.