NOVA LUCE

9365015

1

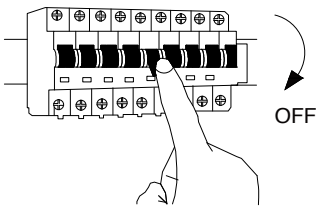

Turn off the general switch

2

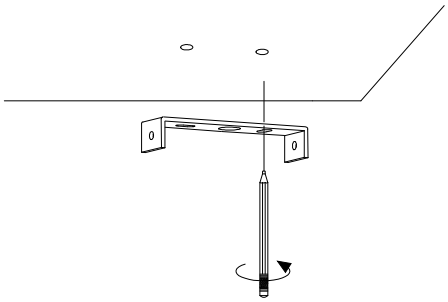

Mark where to drill holes

3

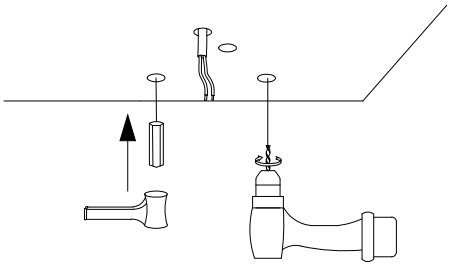

Apply plastic anchors

4

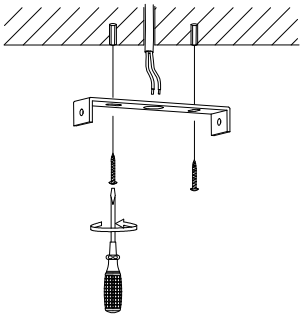

Apply screws

5

CCT switch in canopy

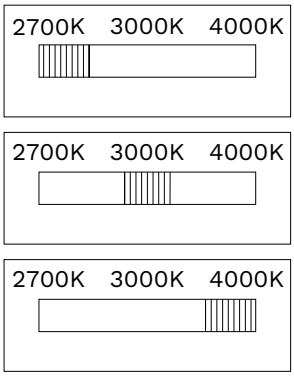

Choose the color temperature

6

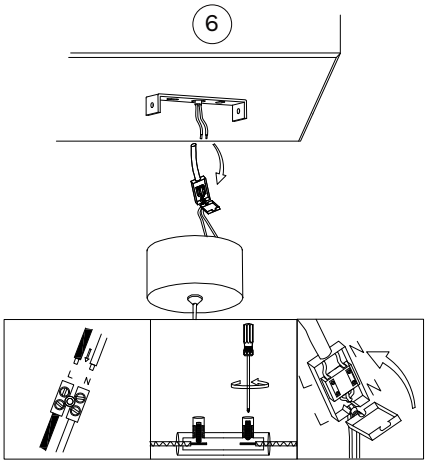

Connect the wires

7

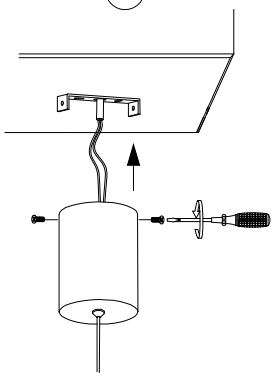

Apply side screws

8

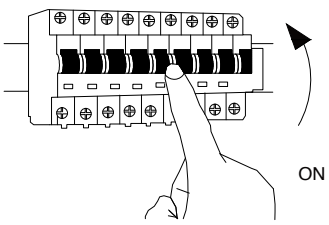

Turn on the general switch

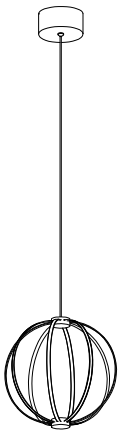

www.novaluce.com