ASSEMBLY INSTRUCTION
4281

A	B	C	D	E
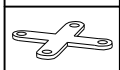			 Ø6	 P4
1 PC	4 PCS	4 PCS	8 PCS	1 PC

FIG. 1

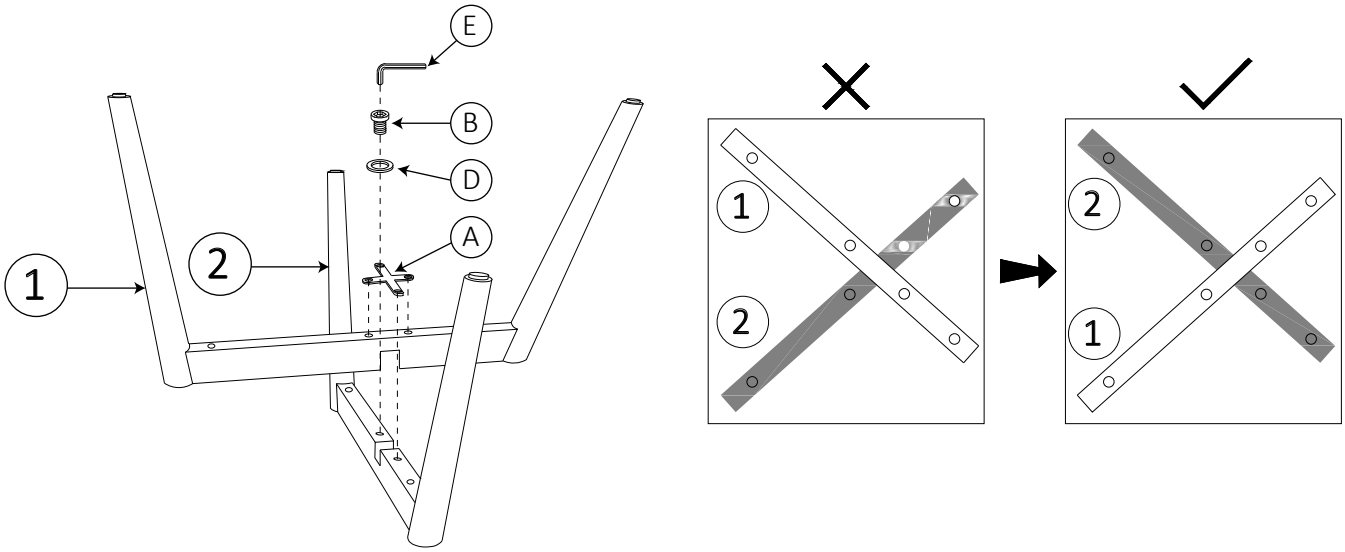

FIG. 2

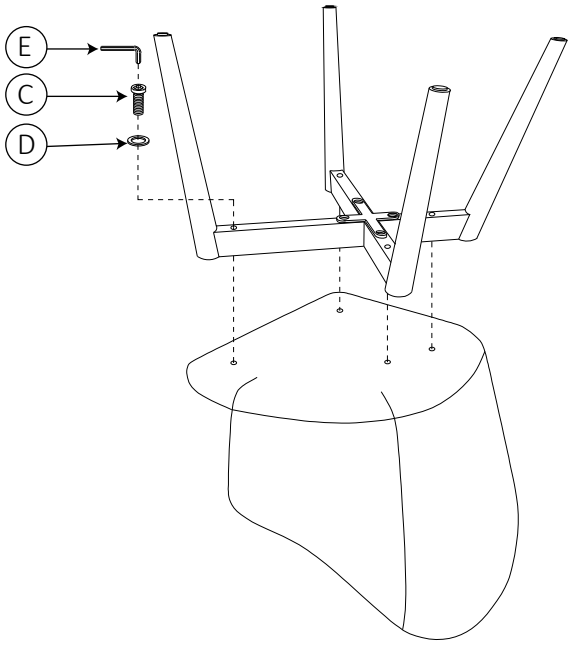

ASSEMBLY INSTRUCTION
4281

A	B	C	D	E
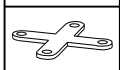			 Ø6	 P4
1 PC	4 PCS	4 PCS	8 PCS	1 PC

FIG. 3

