ASSEMBLY INSTRUCTION
3337

angel cerdá

A	B	C	D	E	F	G	H
 P5	 P4	 M8	 M6	 Ø6	 M6	 M4	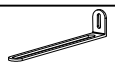
1 PC	1 PC	4 PCS	2 PCS	4 PCS	2 PCS	2 PCS	2 PCS

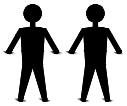

FIG. 1

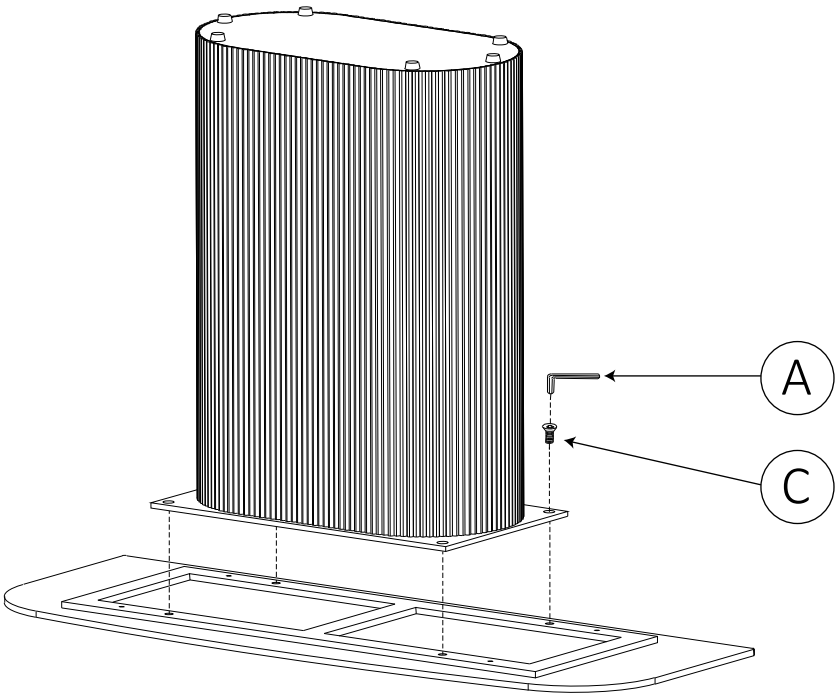

FIG. 2

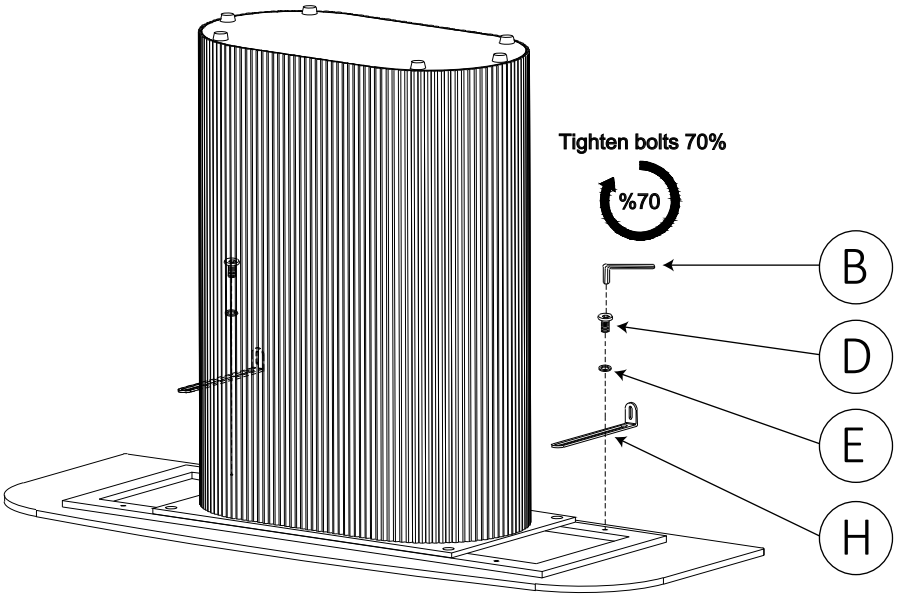

ASSEMBLY INSTRUCTION
3337

A	B	C	D	E	F	G	H
							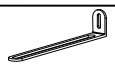
1 PC	1 PC	4 PCS	2 PCS	4 PCS	2 PCS	2 PCS	2 PCS

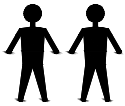

FIG. 3

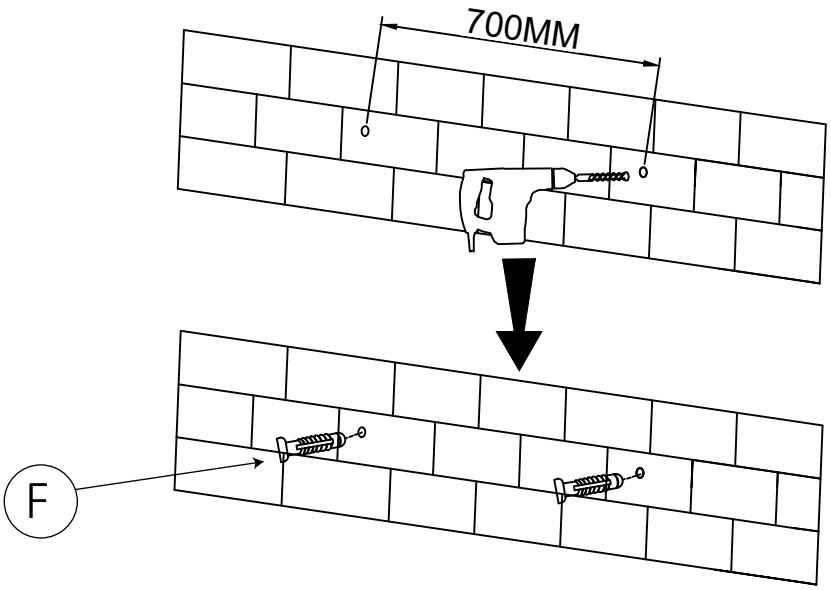

FIG. 4

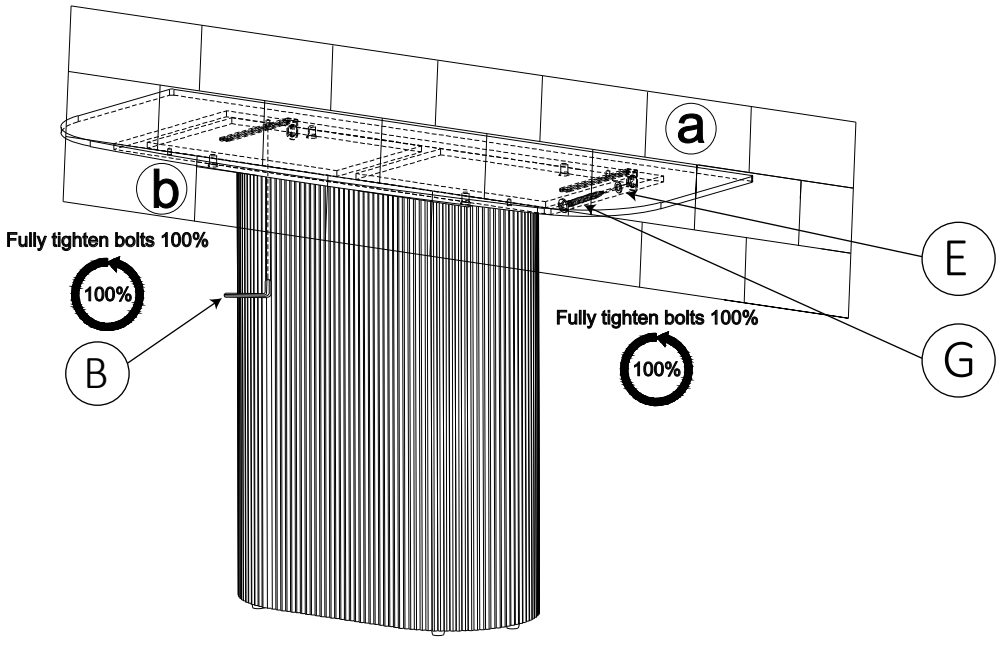

ASSEMBLY INSTRUCTION
3337

A	B	C	D	E	F	G	H
 P5	 P4	 M8	 M6	 Ø6	 M6	 M4	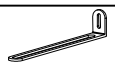
1 PC	1 PC	4 PCS	2 PCS	4 PCS	2 PCS	2 PCS	2 PCS

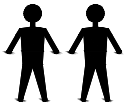

FIG. 5

